Green Pin® Super Shackles
Group: G-5261
Part : SUGHBB25
WLL : 12.5t

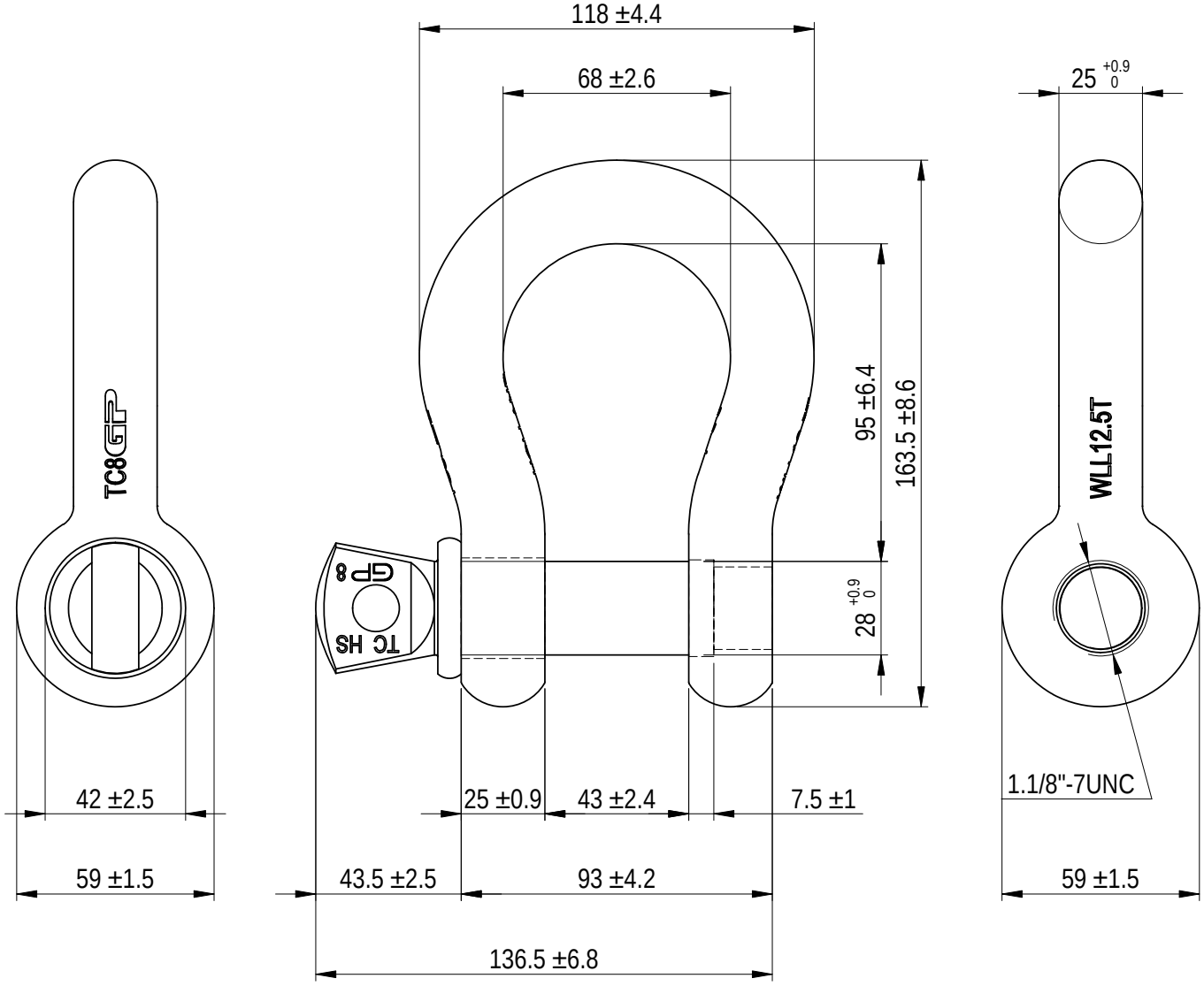

We reserve the right to make amendments on specifications in this drawing without prior notification.

Rev.	Description	Date	Drawn
0	First Issue	2016-9-1	DL

Copyright by Van Beest B.V. moreover this document is the property of Van Beest B.V. This document or any part of it may neither be made known, copied or multiplied, nor used for any purpose other than that for which it is specifically furnished, without the prior written consent of Van Beest B.V.

VAN BEEST
P.O. Box 57, 3360 AB Sliedrecht
(The Netherlands)
Industrieweg 6, 3361 HJ Sliedrecht
Tel. +31(0)184-413300 www.vanbeest.nl

Format A4
Scale 1:2

Title Green Pin® Super Shackles
bow shackles with screw collar pin

Remark
G-5261
SUGHBB25

Drawing number 5554
Rev. 0